PARTS LIST FOR MODEL
FATHOM 60 LDHS
REEL PART NO. 1422246

Key No.	Part No.	PENN Style No.	Description
1	1428283	1-FTH60LDHS	Right Side Plate Assembly
1D	1309865	1D-FTH40NLD2	Bridge
2	1338137	2-FTH40NLDR	Quadrant (Red)
2A	1264977	2A-TRQ40NLD2	Drag Lever Ratchet
4	1264978	4-TRQ15LD2	Lever Washer
5	1338141	5-FTH40NLDHS	Main Gear
8	1257843	8-30SLD	Spring Washer
13	1338145	13-FTH40NLDHS	Pinion
13B	1309869	13B-FTH40NLD2	Sleeve Spindle
13L	1338146	13L-FTH40NLD	Spacer
14	1181406	14-535	Spring-Dog
15	1229374	15-TRQ40	Dog Asm (2 req)
16	1188686	16-20	Bridge Screw (2 req)
18	1265001	18-TRQ40NLD2	Spring Washer (2 req)
19	1296248	19-TRQ40NLD2	Drag Cam

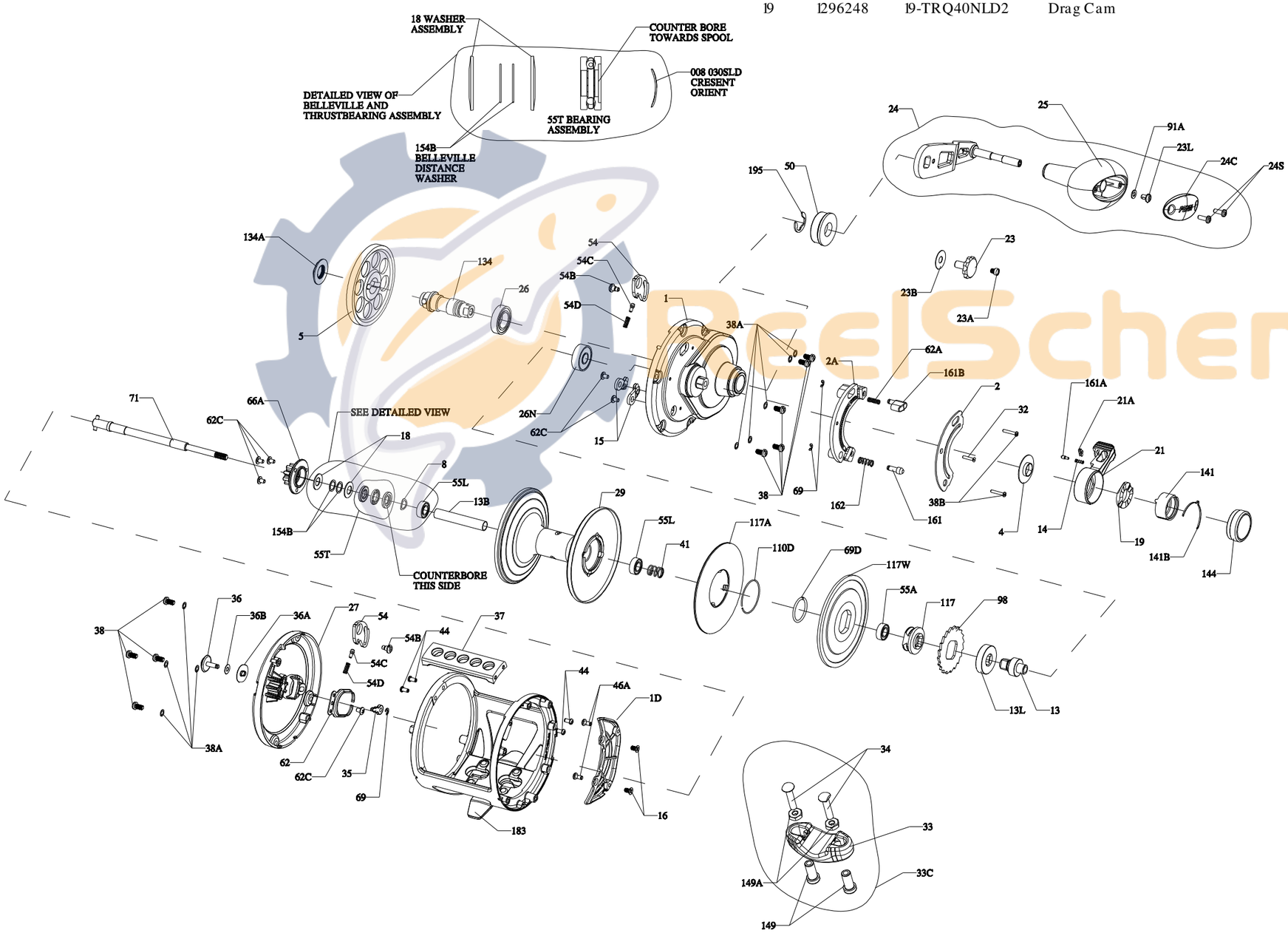

Key No.	Part No.	PENN Style No.	Description
21	1428284	21-FTH60LDR	Lever Drag (Red)
21A	1265011	21A-TRQ30LD2	Lever Quadrant Spacer
23	1208117	23-FTH20LW	Screw, Handle Nut
23A	1188717	23A-20	Handle Lock Screw
23B	1207784	23B-20	Handle Nut Washer
23L	1191283	23L-750	Screw
24	1342441	24-FTH40NLDHSR	Handle Assembly (Red / Gun Smoke)
24C	1286717	24C-SQL50LW	Handle Knob Cap
24S	1265021	24S-TRQ40NLD2	Screw (Smoke) (2 req)
25	1286716	25-SQL50	Handle Knob
26	1265023	26-TRQ40NLD2	Bearing-Ball
26N	1182145	26N-25	Bearing-Ball
27	1428285	27-FTH60LDHS	Left Side Plate Assembly
29	1428286	29-FTH60LDHS	Spool (Red Gun / Smoke)
32	1265049	32-TRQ15LD2S	Screw
33	1290729	33-TRQ	Rod Clamp Aluminum
33C	1290731	33C-TRQ40NLD2	Rod Clamp Kit
34	1182788	34-45	Screw, Rod Clamp (2 req)
35	1188656	35-20	Click Tongue
36	1309882	36-FTH40NLD2	Click Button
36A	1309883	36A-FTH40NLD2	Click Washer
36B	1188651	36B-20	Washer
37	1309884	37-FTH60LD2	Top Spacer
38	1309885	38-FTH15LD2	Screw (9 req)
38A	1188649	38A-20	Flat Washer (9 req)
38B	1265055	38-TRQ40NLD2S	Screw (2 req)
41	1265056	41-TRQ40NLD2	Drag Disengaging Spring
44	1183450	44-4200	Screw (4 req)
46A	1183585	46A-4300	Cover Plate Screw (2 req)
50	1309889	50-FTH60LD2	Shield, Guard
54	1230159	54-TRQ40	Harness Lug (2 req)
54B	1230164	54B-TRQ40	Harness Lug Screw (2 req)
54C	1342443	54C-FTH60LD2	Lug Locating Pin (2 req)
54D	1230166	54D-TRQ40	Harness Lug Spring (2 req)
55A	1238912	55A-50SLD	Ball Bearing
55L	1286985	55L-20	Ball Bearing (2 req)
55T	1238913	55T-30SLD	Thrust Bearing
62	1188664	62-20	Click Spring
62A	1236596	62-TRQ40	Spring Click Locator
62C	1188654	62C-20	Screw (6 req)
66A	1265059	66A-FTHLD	Click Gear
69	1188657	69-20	Retainer (3 req)
69D	1265060	69D-FTH15LD	Retaining Ring
71	1309894	71-FTH60LD2	Spindle Complete
91A	1277514	91A-TRQ40NLD2	Handle Knob Washer
98	1265073	98-FTH40NLD2	Ratchet
110D	1309895	110D-FTH15LD2	Retaining Ring
117	1309896	117-FTH15LD2	Drive Plate
117A	1309899	117A-FTH40NLD2	Drag Washer (Assembly)
117W	1309902	117W-FTH40NLD2	Drag Washer Metal
134	1338160	134-FTH40NLD	Gear Stud
134A	1265086	134A-30SLD2	Nut Gear Stud
141	1265088	141-TRQ15LD2	Cam Follower
141B	1265089	141B-TRQ15LD2	Preset Knob Click Spring
144	1265090	144-TRQ15LD2B	Preset Knob (Black)
149	1184702	149-45	Rod Clamp Nut (2 req)
149A	1184706	149-200	Hex Nut (2 req)
154B	1309903	154B-FTH25NLD2	Belleville Distance Washer (2 req)
161	1265097	161-TRQ40NLD2	Locating Button
161A	1265098	161A-TRQ15LD2	Lever Click Pin
161B	1265099	161B-TRQ40NLD2	Strike Button
162	1318280	162-TRQ40NLD2	Spring
183	1309909	183-FTH60LD2	Frame Assembly
195	1184955	195-40	Retaining Ring

1428287
407-FTH60LDHS Rev 0 10-4-16